GALLONS	59	56	N/A	N/A
LITERS	222	211	N/A	N/A
	TOTAL CAPACITY	USEABLE CAPACITY	TOTAL CAPACITY	USEABLE CAPACITY
	DIESEL FUEL		BIO-DIESEL/ HYDRAULIC/WATER	

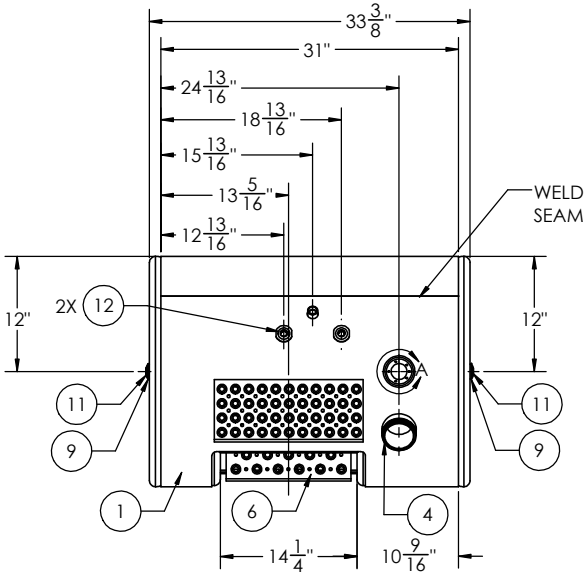

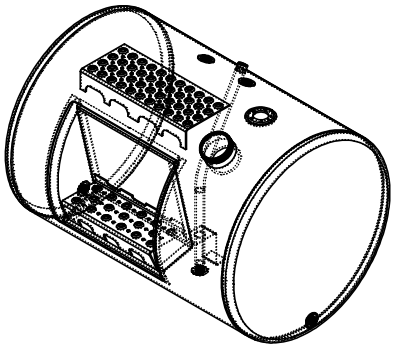

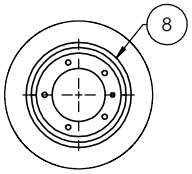

DETAIL A
SCALE 1 : 3

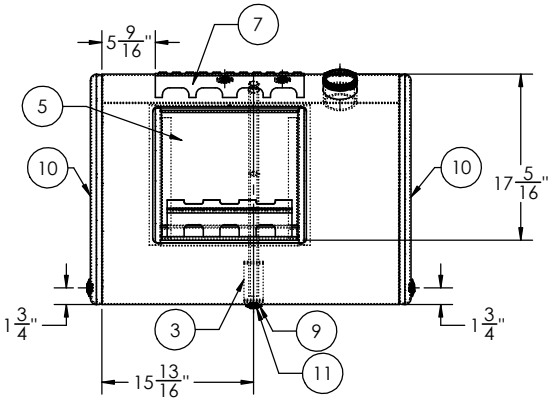

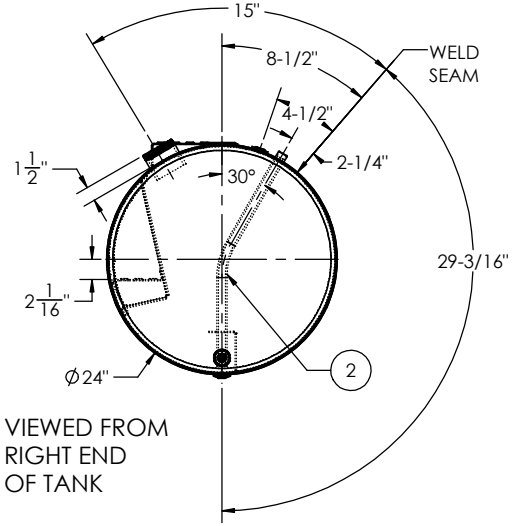

VIEWED FROM RIGHT END OF TANK

ITEM NO.	PART NUMBER	DESCRIPTION	QTY.
1	BRL-AT-MK-1088	1/8" TANK BARREL	1
2	TBS-501200	1/2" NPTF TUBE	1
3	STR-001 (DIA 24.00 TUBE 1.125)	SMALL TUBE STABILIZER (1.125)	1
4	FLN-0481212210	3" LONG - 3" NPSM - 8 TPI MILGRADE ALUMINUM FILL NECK	1
5	PKT-6	14" WIDE CYLINDRICAL TANK MILGRADE ALUMINUM POCKET	1
6	SEP-6	13" WIDE MILGRADE ALUMINUM CYLINDRICAL TANK INSERT STEP	1
7	SEP-21	15" WIDE MILGRADE ALUMINUM CYLINDRICAL TANK UPPER STEP	1
8	BSE-00182220	CURVED MILGRADE ALUMINUM SENDER BASE	1
9	FLG-050220	1/2" NPTF MILGRADE ALUMINUM FLANGE	3
10	ECP-3840012102	24" MILGRADE ALUMINUM END CAP WITH 1/2" FLANGE	2
11	94135	1/2" SOCKET PIPE PLUG 3/4" TAPER NPTF ZINC	3
12	FLG-040220	3/8" NPTF MILGRADE ALUMINUM FLANGE	2

MACK PART NUMBER: 2MB4957AP15

TITLE: 24" D x 31" L

SIZE	REV	QC	INITIALS
C		PSI	
		DIMS	
		PARTS	
		TAG	
		PKG	

PROPRIETARY AND CONFIDENTIAL
THE INFORMATION CONTAINED IN THIS DRAWING IS THE SOLE PROPERTY OF ALUMITANK. ANY REPRODUCTION IN PART OR AS A WHOLE WITHOUT THE WRITTEN PERMISSION OF ALUMITANK IS PROHIBITED.

UNLESS OTHERWISE SPECIFIED:
DIMENSIONS ARE IN INCHES
TOLERANCES:
FRACTIONAL ±
ANGULAR: MACH ± BEND ±
TWO PLACE DECIMAL ±
THREE PLACE DECIMAL ±
INTERPRET GEOMETRIC TOLERANCING PER:
MATERIAL 5052 H32 ALUMINUM
FINISH SEE BOM
DO NOT SCALE DRAWING

	NAME	DATE
DRAWN		
CHECKED		
ENG APPR.		
MFG APPR.		
Q.A.		

COMMENTS:

AlumiTank®
THE FUEL TANK SPECIALISTS
11317 N. US HWY 14
HARVARD, IL 60033
815-943-6649
800-652-6630
FAX 855-774-6918
WWW.ALUMITANK.COM
INFO@ALUMITANK.COM

DWG. NO. AT-MK-1088 REV. A

SCALE: 1:10 | WEIGHT: 48.09 | SHEET 2 OF 2