GALLONS	118	112	N/A	N/A
LITERS	447	425	N/A	N/A
	TOTAL CAPACITY	USEABLE CAPACITY	TOTAL CAPACITY	USEABLE CAPACITY
	DIESEL FUEL		BIO-DIESEL/ HYDRAULIC/WATER	

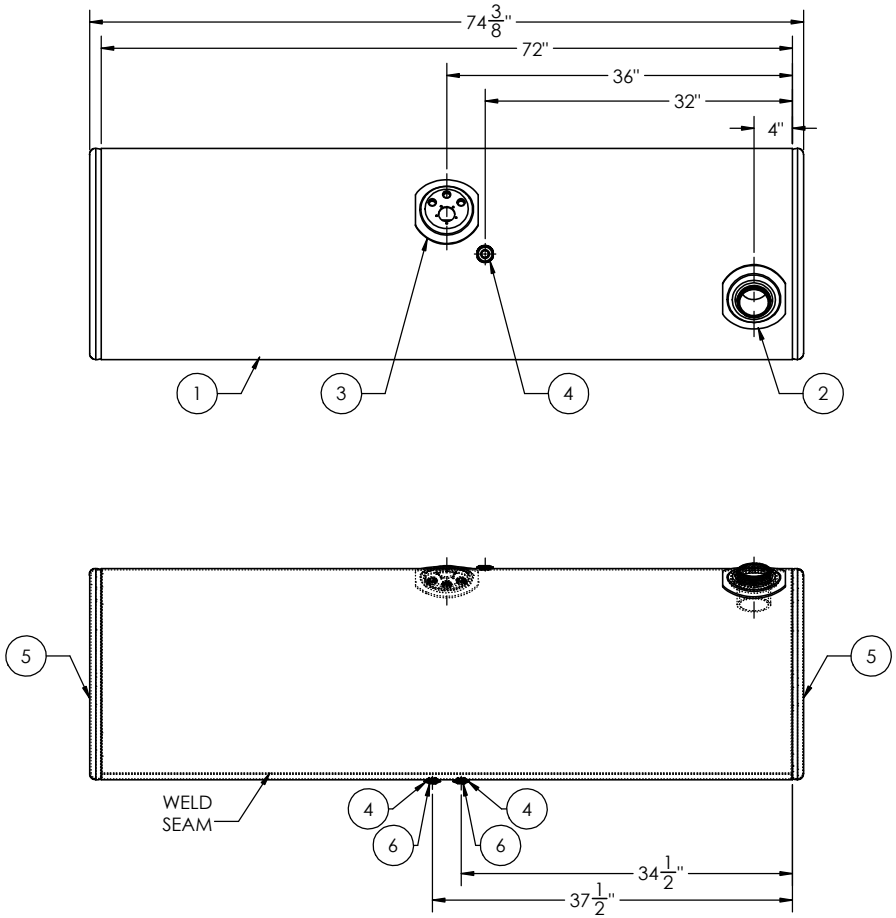

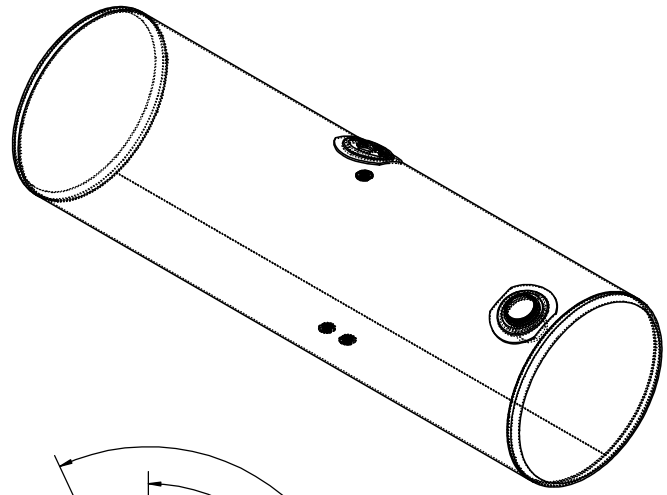

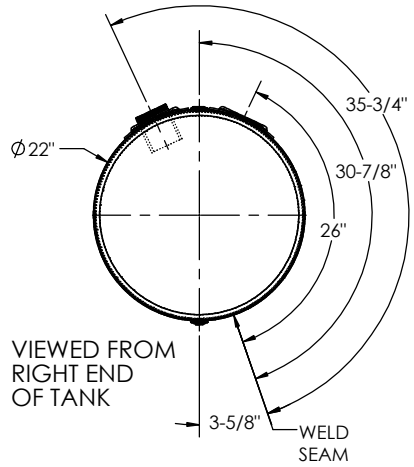

ITEM NO.	PART NUMBER	DESCRIPTION	QTY.
1	BRL-AT-KW-1066	1/8" TANK BARREL	1
2	FLN-801212200	MILGRADE ALUMINUM KENWORTH FILL NECK	1
3	ADP-832210	MILGRADE ALUMINUM KENWORTH ADAPTER PLATE	1
4	FLG-050220	1/2" NPTF MILGRADE ALUMINUM FLANGE	3
5	ECP-3520012100	22" MILGRADE ALUMINUM END CAP	2
6	94135	1/2" SOCKET PIPE PLUG 3/4" TAPER NPTF ZINC	2

KENWORTH PART NUMBER: K422-0915N1728K120

TITLE: 22" D x 72" L

SIZE: C | REV | QC | INITIALS
PSI
DIMS
PARTS
TAG
PKG

PROPRIETARY AND CONFIDENTIAL
THE INFORMATION CONTAINED IN THIS DRAWING IS THE SOLE PROPERTY OF ALUMITANK. ANY REPRODUCTION IN PART OR AS A WHOLE WITHOUT THE WRITTEN PERMISSION OF ALUMITANK IS PROHIBITED.

UNLESS OTHERWISE SPECIFIED:
DIMENSIONS ARE IN INCHES
TOLERANCES:
FRACTIONAL ±
ANGULAR: MACH ± BEND ±
TWO PLACE DECIMAL ±
THREE PLACE DECIMAL ±
INTERPRET GEOMETRIC TOLERANCING PER:
MATERIAL: 5052 H32 ALUMINUM
FINISH: SEE BOM
DO NOT SCALE DRAWING

	NAME	DATE
DRAWN		
CHECKED		
ENG APPR.		
MFG APPR.		
Q.A.		

COMMENTS:

AlumiTank® THE FUEL TANK SPECIALISTS
11317 N. US HWY 14
HARVARD, IL 60033
815-943-6649
800-652-6630
FAX 855-774-6918
WWW.ALUMITANK.COM
INFO@ALUMITANK.COM

DWG. NO. AT-KW-1066 | REV. A

SCALE: 1:10 | WEIGHT: 72.74 | SHEET 1 OF 1