GALLONS	103	98	N/A	N/A
LITERS	389	369	N/A	N/A
	TOTAL CAPACITY	USEABLE CAPACITY	TOTAL CAPACITY	USEABLE CAPACITY
	DIESEL FUEL		BIO-DIESEL/ HYDRAULIC/WATER	

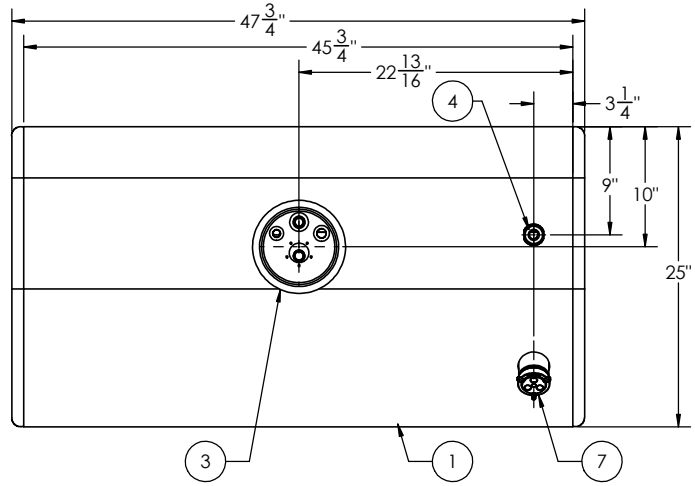

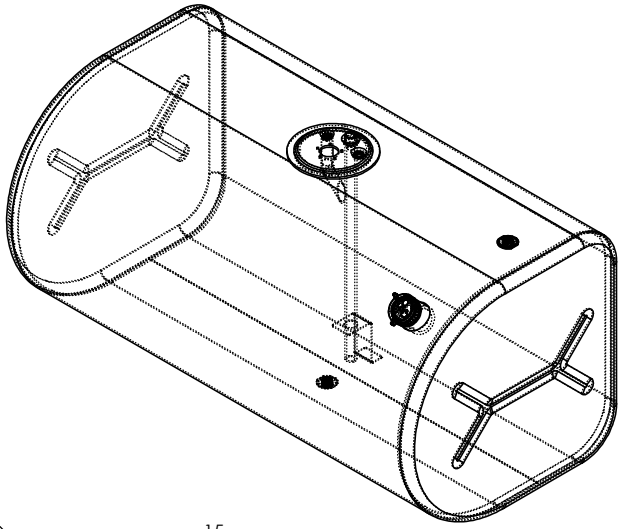

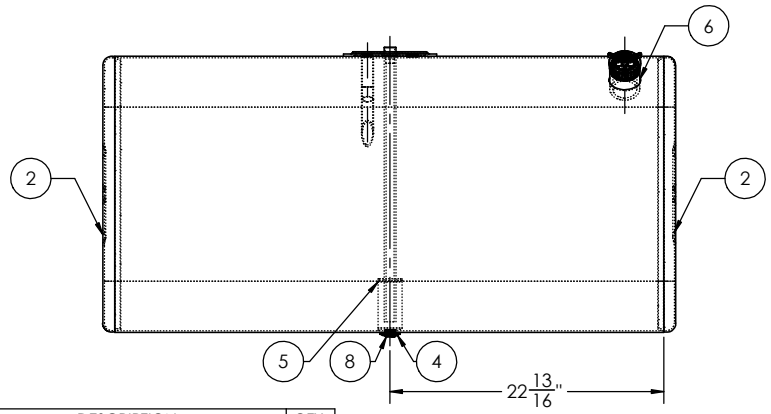

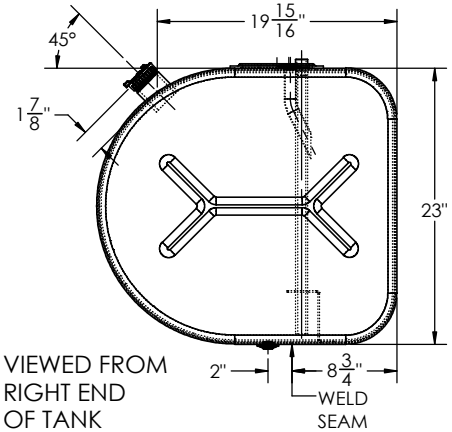

VIEWED FROM RIGHT END OF TANK

ITEM NO.	PART NUMBER	DESCRIPTION	QTY.
1	BRL-AT-IN-3006	1/8" TANK BARREL	1
2	ECP-036840012400	23" X 25" MILGRADE ALUMINUM "D" SHAPED END CAP	2
3	ADP-51222368	23" MILGRADE ALUMINUM DRIVER SIDE INTERNATIONAL ADAPTER PLATE	1
4	FLG-050220	1/2" NPTF MILGRADE ALUMINUM FLANGE	2
5	STR-001 (FLAT 1.125)	SMALL TUBE STABILIZER (1.125)	1
6	FLN-0481012230	3" LONG - 2" NPSM - 11.5 TPI MILGRADE ALUMINUM FILL NECK	1
7	FCP-1330 (600133)	2" NON-VENTED, NON-LOCK CAP	1
8	94135	1/2" SOCKET PIPE PLUG 3/4" TAPER NPTF ZINC	1

INTERNATIONAL PART NUMBER: 2507034C92

TITLE: 23" H x 25" W x 45.75" L

SIZE	REV	QC	INITIALS
C		PSI	
		DIMS	
		PARTS	
		TAG	
		PKG	

PROPRIETARY AND CONFIDENTIAL
THE INFORMATION CONTAINED IN THIS DRAWING IS THE SOLE PROPERTY OF ALUMITANK. ANY REPRODUCTION IN PART OR AS A WHOLE WITHOUT THE WRITTEN PERMISSION OF ALUMITANK IS PROHIBITED.

UNLESS OTHERWISE SPECIFIED:
DIMENSIONS ARE IN INCHES
TOLERANCES:
FRACTIONAL ±
ANGULAR: MACH ± BEND ±
TWO PLACE DECIMAL ±
THREE PLACE DECIMAL ±
INTERPRET GEOMETRIC TOLERANCING PER:
MATERIAL 5052 H32 ALUMINUM
FINISH SEE BOM
DO NOT SCALE DRAWING

	NAME	DATE
DRAWN		
CHECKED		
ENG APPR.		
MFG APPR.		
Q.A.		

COMMENTS:

AlumiTank®
THE FUEL TANK SPECIALISTS
11317 N. US HWY 14
HARVARD, IL 60033
815-943-6649
800-652-6630
FAX 855-774-6918
WWW.ALUMITANK.COM
INFO@ALUMITANK.COM

DWG. NO. AT-IN-3006 REV. A

SCALE: 1:8 | WEIGHT: 62.86 | SHEET 2 OF 2