GALLONS	61	58	N/A	N/A
LITERS	231	220	N/A	N/A
	TOTAL CAPACITY	USEABLE CAPACITY	TOTAL CAPACITY	USEABLE CAPACITY
	DIESEL FUEL		BIO-DIESEL/ HYDRAULIC/WATER	

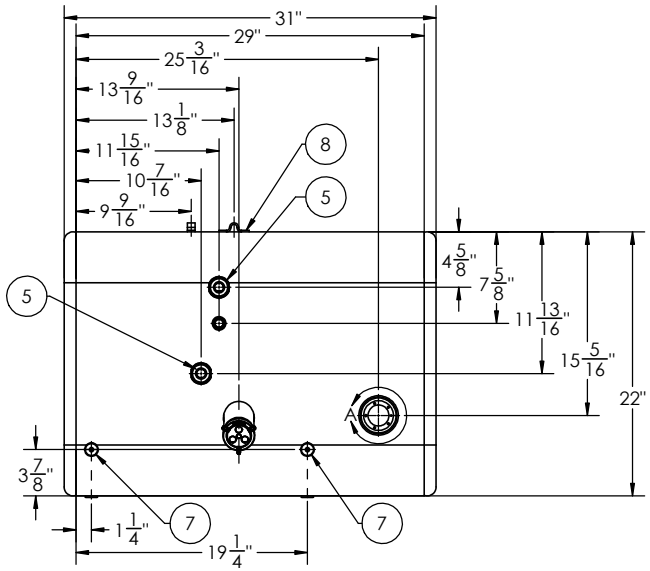

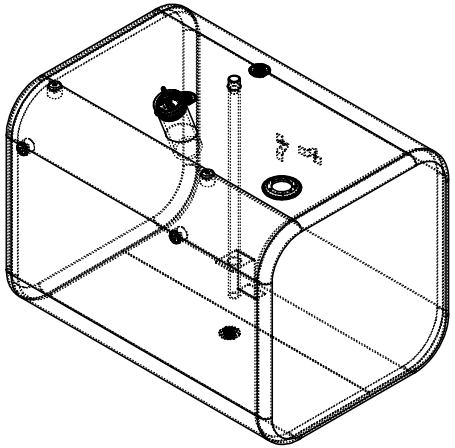

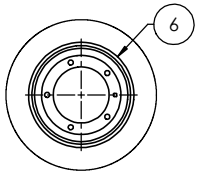

DETAIL A
SCALE 1 : 3

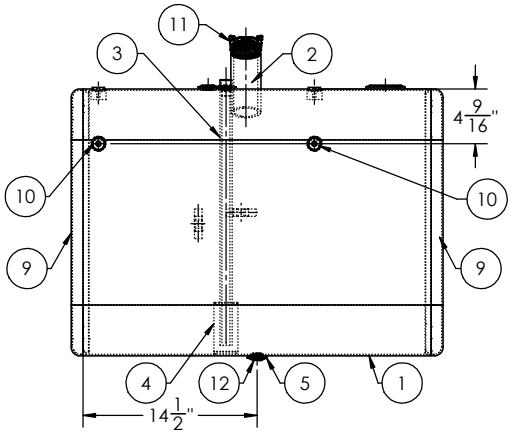

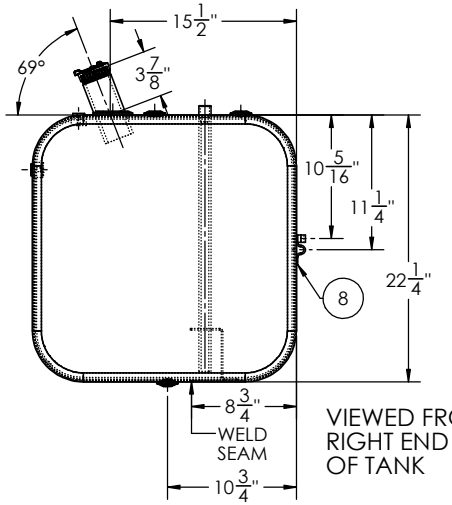

VIEWED FROM RIGHT END OF TANK

ITEM NO.	PART NUMBER	DESCRIPTION	QTY.
1	BRL-AT-FD-2014	1/8" TANK BARREL	1
2	FLN-0961012230	6" LONG - 2" NPSM - 11.5 TPI MILGRADE ALUMINUM FILL NECK	1
3	TBS-503200-2225	1/2" NPTF STRAIGHT ALUMINUM TUBE	1
4	STR-001 (FLAT 1.125)	SMALL TUBE STABILIZER (1.125)	1
5	FLG-050220	1/2" NPTF MILGRADE ALUMINUM FLANGE	3
6	BSE-00182230	FLAT MILGRADE ALUMINUM SENDER BASE	1
7	STB-392250	5/16-18 MILGRADE ALUMINUM FLAT STEP BUSHING	2
8	MSC-001	MILGRADE ALUMINUM HOSE CLIP	2
9	ECP-035235612600	22" X 22-1/4" MILGRADE ALUMINUM RECTANGULAR END CAP	2
10	STB-482250	3/8-16 MILGRADE ALUMINUM FLAT STEP BUSHING	2
11	FCP-1330 (600133)	2" NON-VENTED, NON-LOCK CAP	1
12	94135	1/2" SOCKET PIPE PLUG 3/4" TAPER NPTF ZINC	1

FORD PART NUMBER: F7HT-9002-DA

TITLE: 22.25" H x 22" W x 29" L

SIZE	REV	QC	INITIALS
C		PSI	
		DIMS	
		PARTS	
		TAG	
		PKG	

PROPRIETARY AND CONFIDENTIAL
THE INFORMATION CONTAINED IN THIS DRAWING IS THE SOLE PROPERTY OF ALUMITANK. ANY REPRODUCTION IN PART OR AS A WHOLE WITHOUT THE WRITTEN PERMISSION OF ALUMITANK IS PROHIBITED.

UNLESS OTHERWISE SPECIFIED:
DIMENSIONS ARE IN INCHES
TOLERANCES:
FRACTIONAL ±
ANGULAR: MACH ± BEND ±
TWO PLACE DECIMAL ±
THREE PLACE DECIMAL ±
INTERPRET GEOMETRIC TOLERANCING PER:
MATERIAL 5052 H32 ALUMINUM
FINISH SEE BOM
DO NOT SCALE DRAWING

	NAME	DATE
DRAWN		
CHECKED		
ENG APPR.		
MFG APPR.		
Q.A.		

COMMENTS:

AlumiTank®
THE FUEL TANK SPECIALISTS
11317 N. US HWY 14
HARVARD, IL 60033
815-943-6649
800-652-6630
FAX 855-774-6918
WWW.ALUMITANK.COM
INFO@ALUMITANK.COM

DWG. NO. AT-FD-2014 REV. B

SCALE: 1:8 | WEIGHT: 45.19 | SHEET 2 OF 2